Exp no: 1 Frequency response of common
Date: 26/1/26 emitter amplifier by LT Spice

Aim:

To design and simulate a single-stage commen-emitter amplifier using a transistor in LT-Space, and to analyse its frequency response to determine the voltage gain and bandwidth.

Software required:-

LT-Spice simulator.

Software description:-

LT Spice is completely free with no feature restriction, making it accessible for students, hobbyists and professional alike. Built on the SPICE simulation engine, it provides precise analog circuit simulation including transient AC, DC sweep, noise analyses... Comes with a vast, library of passive Components, semiconductors and Analog Devices IC models.

User can import 3rd-party model or create custom circuits and include them using. include and .lib directives. Allows intuitive

Circuit diagram:

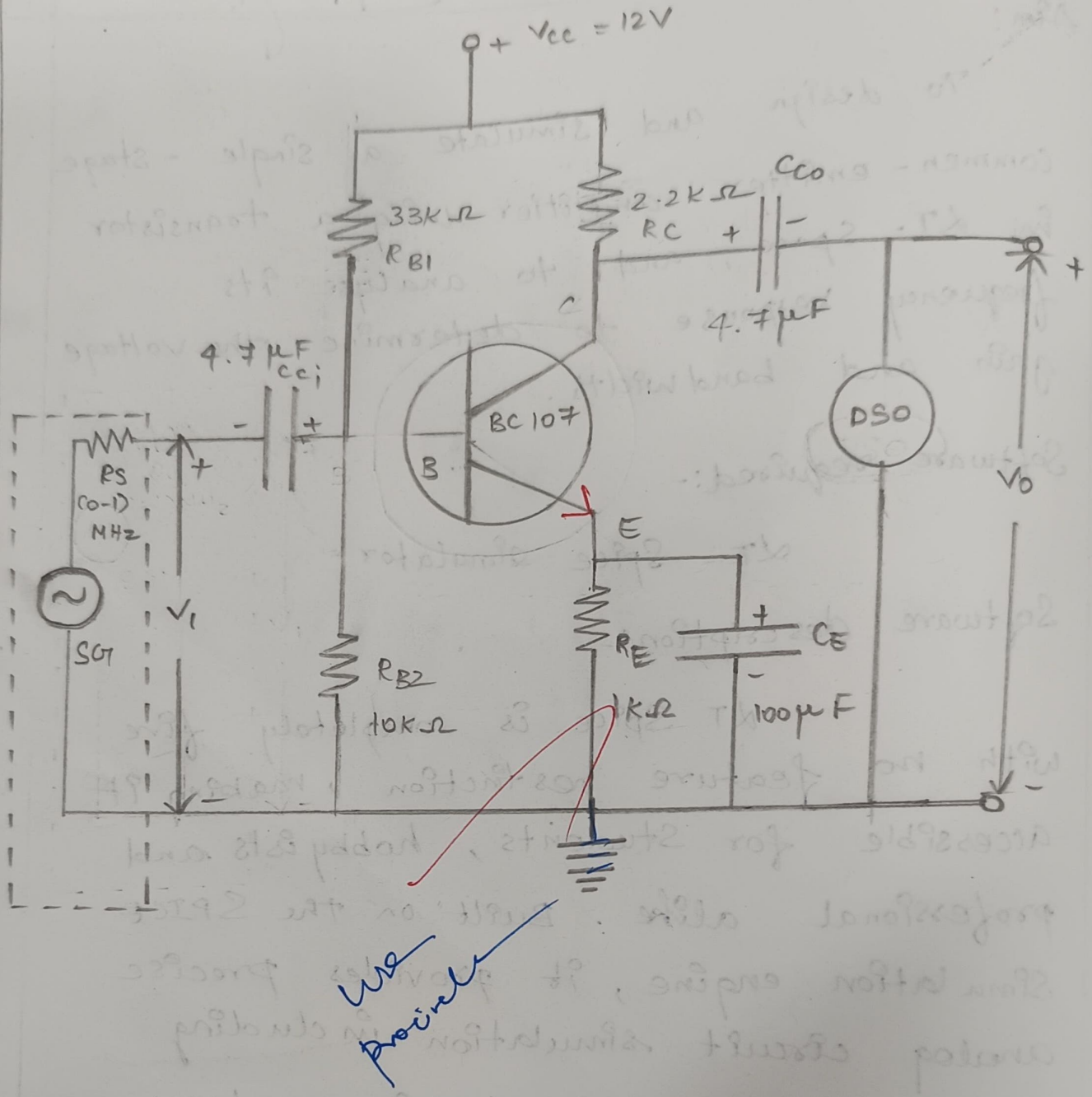

We provide

Schematic creation using drop and drap components and easy wiring tools. Includes a built-in wave form reiwer with support for math operation, cursors, FFT. LTspice is widely adopted in education for teaching and in industries for circuit design, saving time and cost before physical prototyping.

Theory:

Amplifiers are classified as small signal amplifier and large signal amplifiers depending on the shift on operating signal, from the quiscent condition on caused by the input signal. If the shift registor its small, amplifier are reffered as small signal amplifier and if the shift is large, they are known as large signal amplifier. Voltage swing and current swing and signal power handled by such amplifier remain large.

Voltage amplifiers come under small signal amplifier. Power amplifiers are one in which the output power of the signal is increased. They are called large signal amplifier. Figure shows the circuit diagram of a common emitter amplifier.

Model graph

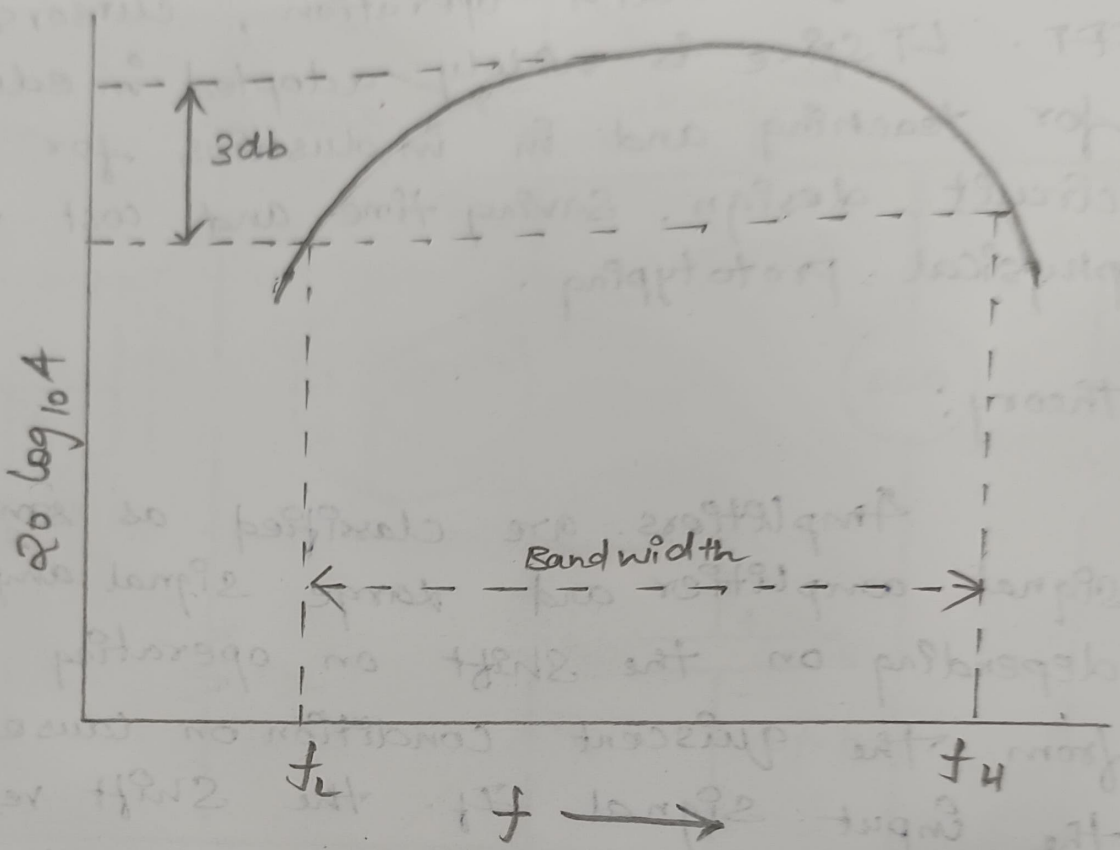

Fig 2. Frequency response.

Design:

From the transistor data sheet, for BC107, $h_{fe} = \beta = 110$, $I_{C_{max}} = 100\,mA$, $V_{CE_{max}} = 45V$

Let $V_{CC} = 12V$, $I_C = 2mA$. Since the quiscent point is in the middle of the load line for the amplifier, $V_{CE} = 50\%$ of $V_{CC} = 6V$.

$V_{RE} = 10\%$ of $V_{CC} = 1.2V$

Assuming $I_C = I_E$

$$V_{RE} = I_C R_E = I_E R_E$$

$$1.2 = 2 \times 10^{-3} \times R_E$$

$$R_E = \frac{1.2}{2 \times 10^{-3}} = 600\,\Omega$$

Select Standard Value for resistance $500\,\Omega$

Voltage across collector resistor,

$$V_{RC} = V_{CC} - V_{CE} - V_{RE}$$

$$= 12 - 6 - 1.2$$

$$= 4.8\,V$$

$$R_C = \frac{V_{RC}}{I_C} = \frac{4.8}{2 \times 10^{-3}} = 2.4\,K\,\Omega$$

Base current, $I_B = \frac{I_C}{\beta} = \frac{2 \times 10^{-3}}{110} = 18.2\,\mu A$.

Output Waveform using LTSpice

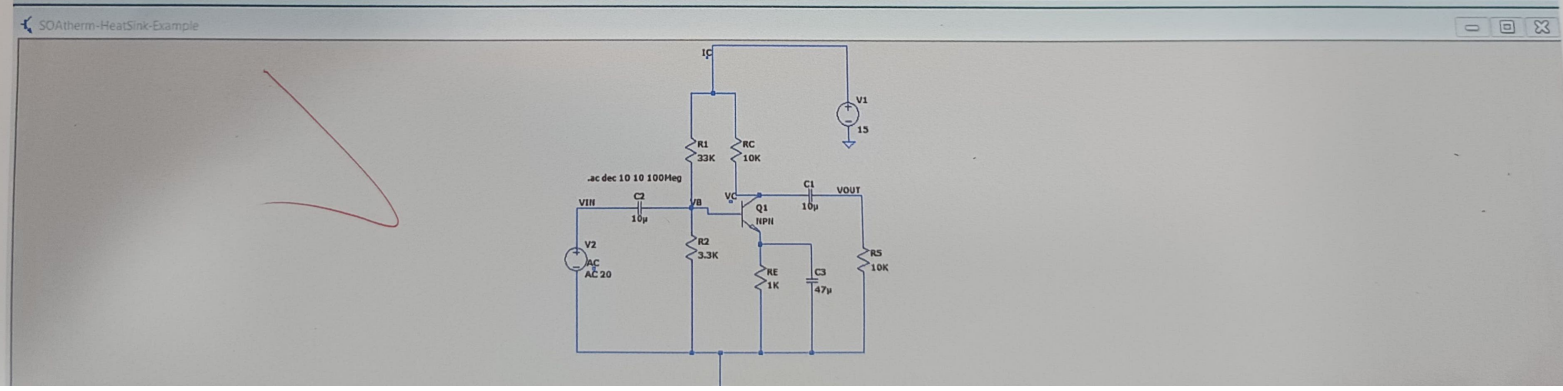

Take . $I_2 = 10 I_B$, then $I_1 = 10 I_B + I_B = 11 I_B$

Base Voltage , $V_B = V_{RE} + V_{BE} = 1.2 + 0.6 = 1.8\ \Omega$

$$R_2 = \frac{V_B}{I_2} = \frac{1.8}{10 \times 18.2 \times 10^{-6}} = 9.9 K\Omega$$

Selected Standard value of $10 K\Omega$

$$R_1 = \frac{V_{CC} - V_B}{I_1} = \frac{12.18}{11 \times 18.2 \times 10^{-6}} = 51 K\Omega$$

Selected Standard value of $47 K\Omega$

DESIGN OF R_L:

Gain of the common emitter amplifier is given by the expression

$$A_v = -\left(\frac{r_e}{r_e}\right)$$

where,

$r_c = R_c \parallel R_L$ and $r_e = \frac{25 mV}{2 mA}$

$r_e = 12.5\ \Omega$

For gain for 50, substituting it in the expression we get

$R_L = 873\ \Omega$

Design of bypass capacitors CE.

To bypass the lowest frequency (say 200Hz) X_{CE} should be much less than or equal to resistance RE.

$$X_{CE} \leq \frac{RE}{10}$$

$$X_{CE} \leq \frac{560}{10} \quad \text{i.e } X_{CE} \leq 56.$$

Apply value of f such that the amplifier has good gain at a lower cutoff frequency of 200Hz.

$$CE \geq \frac{1}{2\pi f X_{CE}} = \frac{1}{2\pi \times 220 \times 56}$$

$$= 14.2\mu F.$$

Selected Standard value of $22\mu F$ for CE.

Frequency Response :-

The gain of an ideal amplifier should remain the same for an frequency of the input signal therefore, the frequency of the input axis. In actual practical the coupling capacitors and the emitter bypass capacitors reduce the gain at lower frequencies.

Calculation :-

(Av) Maximum voltage gain = 42 dB

42 - 3 = 39 dB

Lower cutoff frequency f_L = 100Hz

Upper cutoff frequency f_u = 20 Mhz

Band width BW = $F_u - F_L$ = $20 \times 10^{-6} - 100$

= 19.9 Mhz

Fig. 2 Show the typical frequency response characteristic of CE amplifier. the curve is flat only for middle range of frequencies. there is one low frequency F_L and one high frequency F_H beyond which the gains, A_L and A_H are $1/\sqrt{2}$ gain times A_M at the Middle frequencies. the two frequency are called lower and higher cutoff frequencies. the difference between them is called the bandwidth.

PROCEDURE:

1. Open LTSpice and create a new Schematic
2. Place the circuit components.
3. Wire the components.
4. Set component values.
5. Add a simulation command.
6. Place the simulation command on schemation.
7. Run Simulation.
8. Analyze the Result.

10/3/26

Result :

the common emitter amplifier is design, simulated and its frequency response is plotted using LT Spice Simulator.

$A_V = 39dB$

$f_L = 100Hz$

$f_u = 20MHz$

$BW = 19.9MHz$.